Piper Pendant

DESCRIPTION
Sleek cylinder shaped metal shade provides crisp down light. Includes low-voltage, 50 watt MR16 flood lamp or 8 watt replaceable 500 lumen 80 CRI 3000K LED SORAAÂ® module and six feet of field-cuttable suspension cable. Works with SORAA.

INSTALLATION
Socket terminates with FreeJack male connector, which may be installed into a system connector. Elements ordered with a system prefix include a connector for that system.

ACCESSORIES & OPTICAL CONTROLS
SORAA® LED Bi-Pin Replacement Pendant Module, Swag Hook

WEIGHT
2.5lb / 1.13kg ±

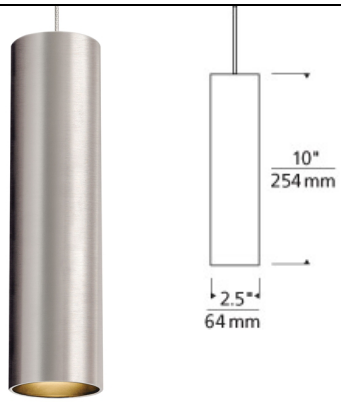

antique bronze

black

satin nickel

white

ORDERING INFORMATION

700 SYSTEM	PPR	FINISH	LAMP
FJ	FREEJACK	**ZZ** ANTIQUE BRONZE/ANTIQUE BRONZE	12 VOLT HALOGEN
MP	MONOPOINT	**BS** BLACK/SATIN NICKEL	**-LEDS830** 12 VOLT LED 80 CRI 3000K
MO	MONORAIL	**SS** SATIN NICKEL/SATIN NICKEL	**-24** 24 VOLT HALOGEN
MO2	TWO-CIRCUIT MONORAIL	**WS** WHITE/SATIN NICKEL	

Note: MP includes 4" Round Flush Canopy.

TECH LIGHTING®
7400 Linder Avenue
Skokie, Illinois 60077
T 847.410.4400
F 847.410.4500

Tech Lighting, L.L.C.

700 ____ PPR ____ ____

FIXTURE TYPE: _____

JOB NAME: _____

NOTES: _____

©2017 Tech Lighting, L.L.C. All Rights Reserved. The "Tech Lighting" graphic is a registered trademark of Tech Lighting, L.L.C.
Tech Lighting reserves the right to change specifications for product improvements without notification.