ASSEMBLY INSTRUCTIONS

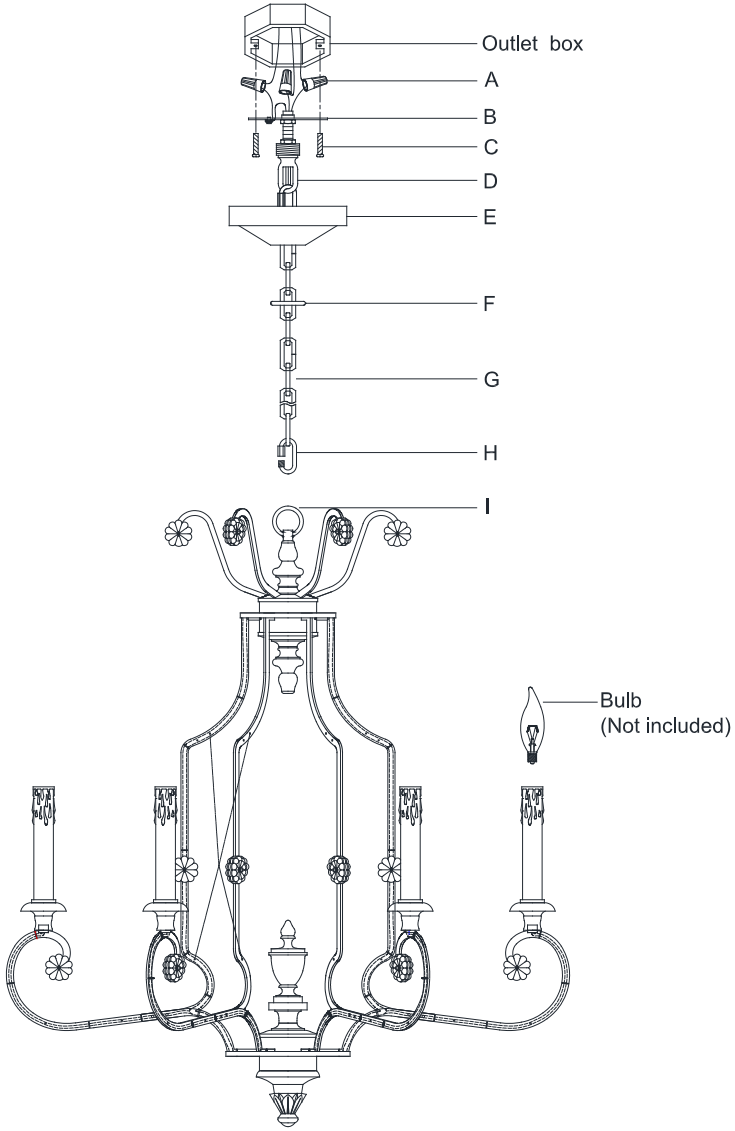

Lucia Medium Chandelier

Item # NW 5155

WE RECOMMEND INSTALLATION OF THIS LIGHTING FIXTURE BE DONE BY A LICENSED ELECTRICIAN.

WARNING*SWITCH OFF THE MAIN ELECTRICAL SUPPLY FROM THE MAIN FUSE BOX/CIRCUIT BREAKER BEFORE INSTALLATION.**

INSPECT ITEM CAREFULLY BEFORE ATTEMPTING TO INSTALL. IF THERE IS ANY DAMAGE OR OBVIOUS DEFECT. DO NOT INSTALL.

ITEM MAY NOT BE RETURNED ONCE IT HAS BEEN INSTALLED.

NOTE: CAREFULLY UNPACK EACH PIECE IN TOP LAYER OF PACKING PRIOR TO REMOVING. RETAIN ALL PACKING MATERIAL UNTIL INSPECTION AND INSTALLATION ARE FINAL.

1. Carefully remove all parts from the box.
2. Install the crossbar (B) with ceiling loop (D) to the outlet box by mounting screws (C) provided.
3. Unscrew the threaded collar on the chain end link (H) and attach it to the top ring (I). Close the threaded collar to secure the fixture body.
4. Let canopy (E) and lock collar (F) go through the chain (G).
5. With the fixture dimension as a guide, shorten the chain (G) as needed using a pair of chain pliers.
6. Unscrew the threaded collar on the other chain end link, raise the fixture then attach chain end link to the ceiling loop (D). Close the threaded collar to secure.
7. Unwrap the wiring from the top of the fixture body. Weave the power supply cord and the ground wire through the chain (G).
8. When you reach the canopy and ceiling loop, measure the wires then cut. Be certain to leave enough to connect inside of the outlet box.
9. Strip the insulation back on the two power supply wires about 5/8".
10. Twist the power supply and ground wire together and push through the center hole of the ceiling loop (D).
11. Connect the fixture Ground (bare) wire with the ground wire from the outlet box using wire nut (A). If your house does not have ground wire, then attach this wire to the green grounding screw inside of the outlet box.
    IT IS IMPERATIVE THAT THIS FIXTURE BE GROUNDED.
12. Connect the fixture Neutral (ribbed, no markings) wire with the neutral wire from the outlet box using wire nut (A).

DRY

VISUAL COMFORT & CO. Est. 1987

ASSEMBLY INSTRUCTIONS

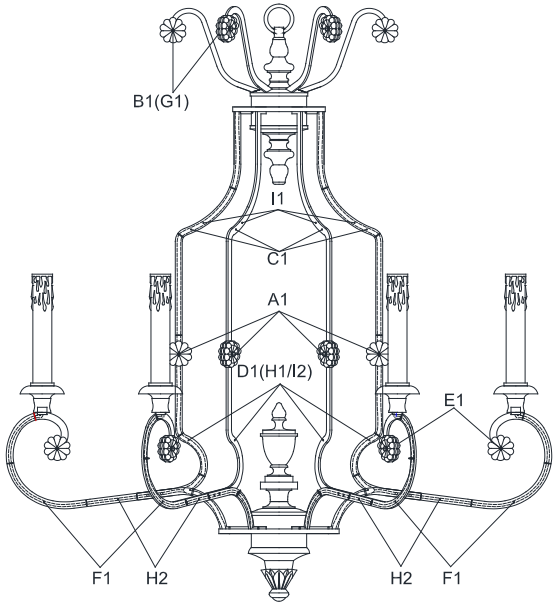

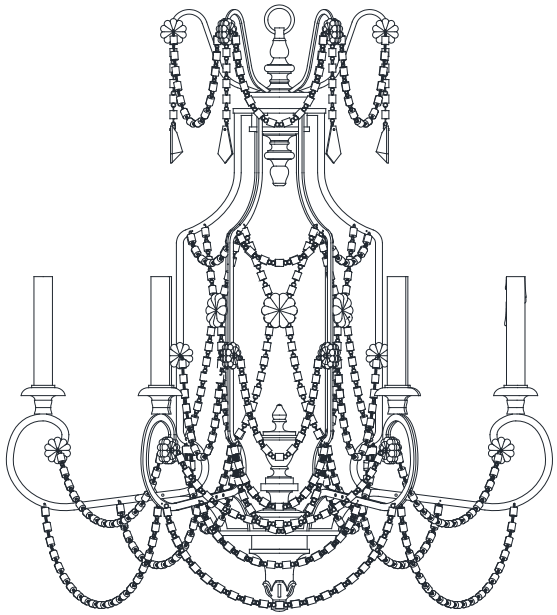

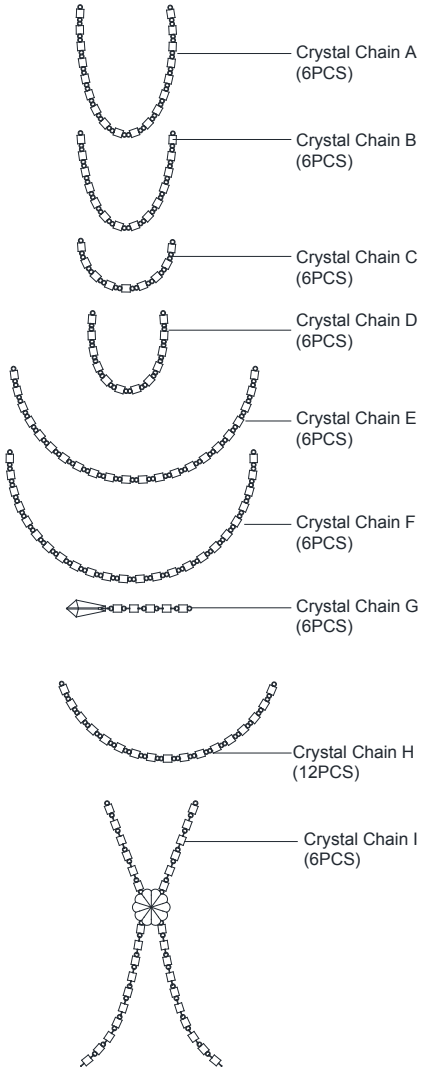

Lucia Medium Chandelier

Item # NW 5155

WE RECOMMEND INSTALLATION OF THIS LIGHTING FIXTURE BE DONE BY A LICENSED ELECTRICIAN.

WARNING*SWITCH OFF THE MAIN ELECTRICAL SUPPLY FROM THE MAIN FUSE BOX/CIRCUIT BREAKER BEFORE INSTALLATION.**

INSPECT ITEM CAREFULLY BEFORE ATTEMPTING TO INSTALL. IF THERE IS ANY DAMAGE OR OBVIOUS DEFECT. DO NOT INSTALL.

ITEM MAY NOT BE RETURNED ONCE IT HAS BEEN INSTALLED.

NOTE: CAREFULLY UNPACK EACH PIECE IN TOP LAYER OF PACKING PRIOR TO REMOVING. RETAIN ALL PACKING MATERIAL UNTIL INSPECTION AND INSTALLATION ARE FINAL.

13. Connect the fixture Hot (smooth edge,markings) wire with the hot wire from the outlet box using wire nut (A).
    DO NOT REVERSE THE HOT AND NEUTRAL CONNECTIONS OR SAFETY WILL BE COMPROMISED.
14. Tuck these wire connections neatly into the outlet box to secure.
15. Put canopy (E) to ceiling loop (D),and secure with lock collar (F).
16. Attach the crystal chain A to the hook (A1).
17. Attach the crystal chain B to the hook (B1).
18. Attach the crystal chain C to the hook (C1).
19. Attach the crystal chain D to the hook (D1).
20. Attach the crystal chain E to the hook (E1).
21. Attach the crystal chain F to the hook (F1).
22. Attach the crystal chain G to the hook (G1).
23. Attach the crystal chain H to the hook (H1 & H2).
24. Attach the crystal chain H to the hook (I1 & I2).
    Please be noted that the hook (B1) & (G1) are the same hook and the hook (D1) & (H1) & (I2) are the same hook.
25. Insert bulbs (not included) into the sockets.
26. Installation is complete,turn on power at fuse or circuit breaker.

***Clean with a dry,soft cloth only.Use no harsh abraslves or chemical agents.

UL DRY

VISUAL COMFORT & CO. Est. 1987