## ASSEMBLY INSTRUCTIONS

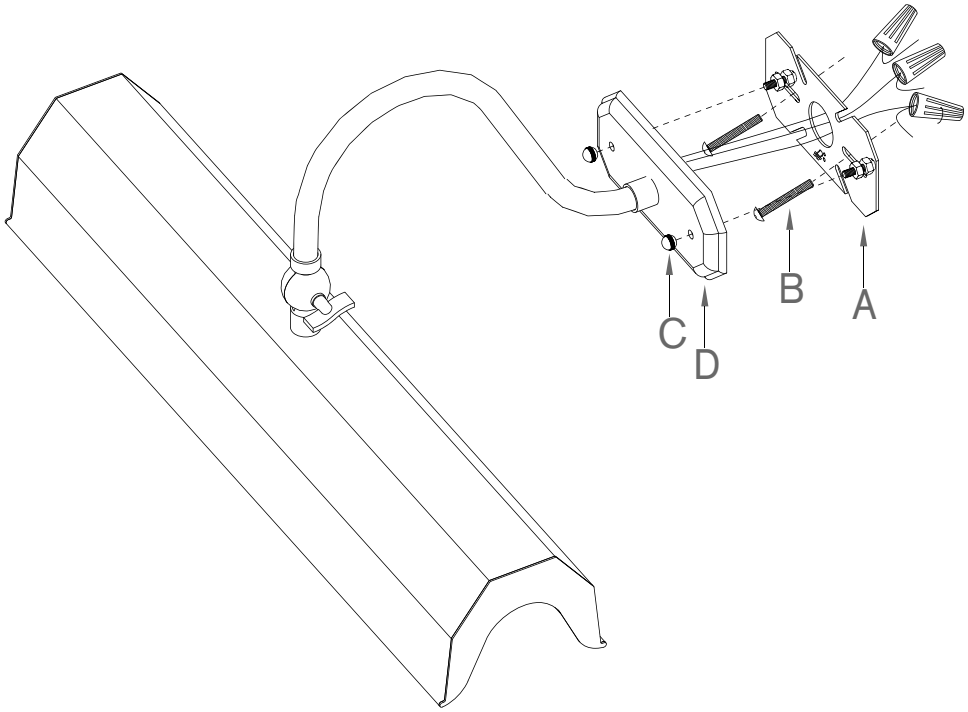


Willoughby Medium Picture Light

Item # RL2697

**WE RECOMMEND INSTALLATION OF THIS LIGHTING FIXTURE BE DONE BY A LICENSED ELECTRICIAN.**

**WARNING *** SWITCH OFF THE MAIN ELECTRICAL SUPPLY FROM THE MAIN FUSE BOX/CIRCUIT BREAKER BEFORE INSTALLATION.**

**INSPECT ITEM CAREFULLY BEFORE ATTEMPTING TO INSTALL. IF THERE IS ANY DAMAGE OR OBVIOUS DEFECT, DO NOT INSTALL.**

**ITEM MAY NOT BE RETURNED ONCE IT HAS BEEN INSTALLED.**

---

1. Remove mounting plate (A) from base of light fixture (D) by removing cap nuts (C) in counter-clockwise direction.
2. Affix mounting plate (A) to wall outlet box with mounting screws (B) provided.
3. Attach ground (green) wire to ground wire from wall outlet box (usually green or copper in color), fasten together with a plastic wire connector. Wrap the wire connector with electrical tape. so the end of the connector is sealed.
   IT IS IMPERATIVE THAT THE OUTLET BOX IN YOUR HOME BE PROPERLY GROUNDED.
4. Connect neutral (white) fixture wire coming from fixture base to neutral (usually white) outlet wire. Fasten both wires together with a plastic wire connector and tightly wrap the wire conncetor with electrical tape.
5. Repeat the procedure with the hot (black) wires. Always make sure that no wire strands are left outside the connectors.
   DO NOT REVERSE THE HOT AND NEUTRAL CONNECTIONS OTHERWISE SAFETY WILL BE COMPROMISED.
6. Attach fixture base (D) to the affixed mounting plate (A), letting both rods on mounting plate (A) pass through the holes on fixture base (D) and secure with cap nuts (C).
7. Insert light bulbs (not included) into sockets.

*** Clean with a dry, soft cloth only. Do not use harsh abrasives or chemical agents.

DRY

RALPH LAUREN