SPEC SHEET

Burt Table Lamp
Item # AH 3046BM-NP

Designer: Alexa Hampton

Height: 27" - 29.25"
Width: 15"
Base: 4.5" Round
Finishes: BM
Shade Treatments: NP
Shade Details: 8" x 15" x 11"
Socket: 2 - E26 Pull Chain
Wattage: 2 - 60 A

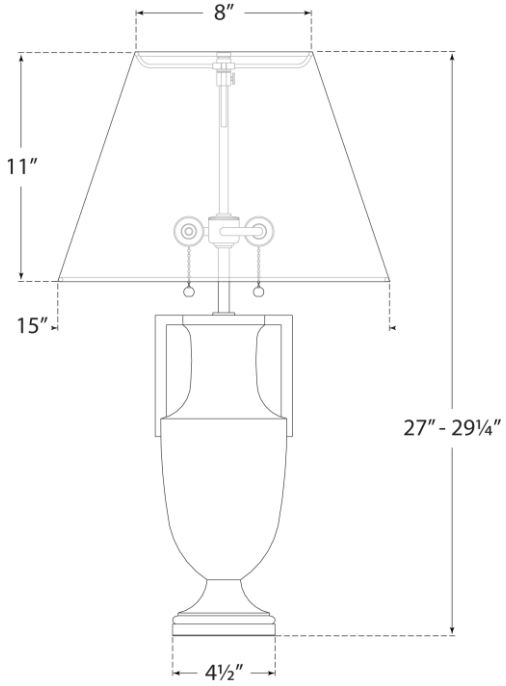

DRY

VISUAL COMFORT & CO. Est. 1987