SPEC SHEET

Alpine Single Sconce
Item # ARN 2310HAB-WG

Designer: AERIN

Height: 16.25"
Width: 5.25"
Extension: 7.75"
Backplate: 4.25" x 7" Rectangle
Finishes: HAB, PN
Glass Options: CG, WG
Socket: 2 - E12 Candelabra
Wattage: 2 - 60 C

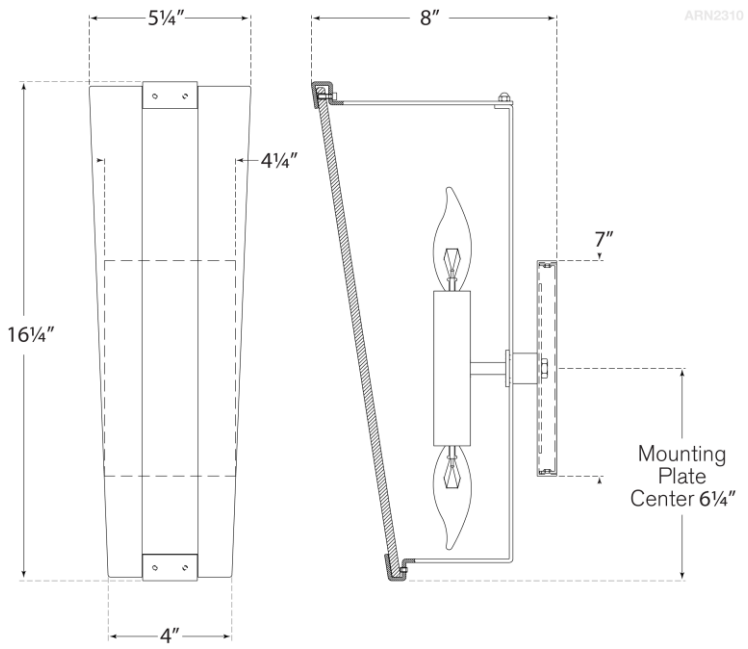

VISUAL COMFORT