SPEC SHEET

Fontaine Table Lamp
Item # ARN 3201GP-L

Designer: AERIN

Height: 29.75"
Width: 16.5"
Base: 13.5" Round
Finishes: GP, PL
Shade Treatments: L
Shade Details: 14.5" x 16.5" x 12.5"
Socket: E26 Dimmer
Wattage: 100 A

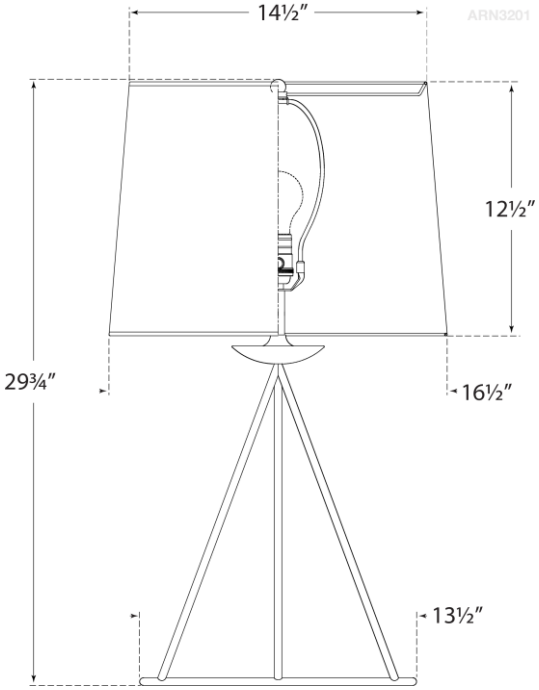

VISUAL COMFORT & CO. Est. 1987