SPEC SHEET

Clout Tail Sconce
Item # BBL 2130SS-L

Designer: Barbara Barry

Height: 19.25"
Width: 7.5"
Extension: 9"
Backplate: 4.75" Round
Finishes: BZ, SB, SS
Shade Treatments: L
Shade Details: 7" x 7.5" x 8"
Socket: E26 Keyless
Wattage: 60 A

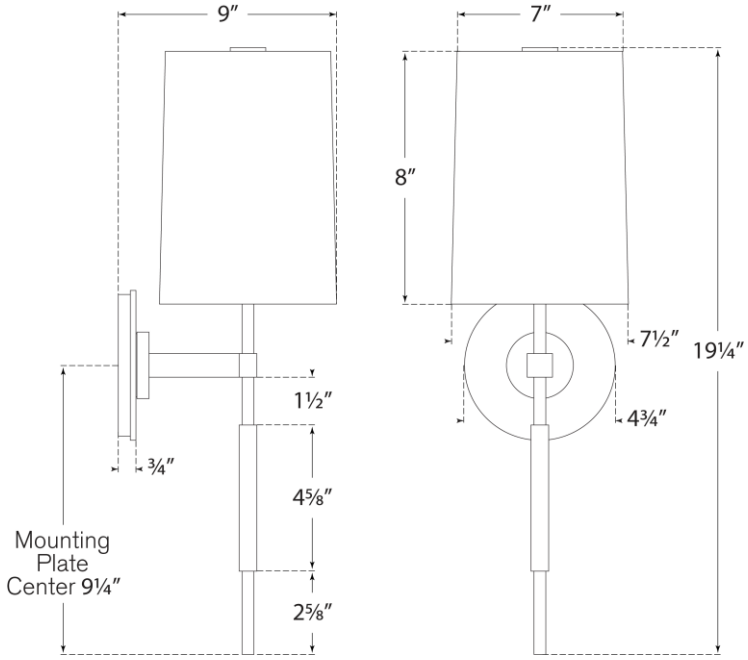

VISUAL COMFORT