SPEC SHEET

Odeum Medium Lantern
Item # BBL 5102BZ-FA

Designer: Barbara Barry

O/A Height: 55.5"
Fixture Height: 32.25"
Min. Custom Height: 36"
Width: 17"
Canopy: 5.5" Round
Finishes: BZ, PN, PWT, SB
Glass Options: FA
Socket: 2 - E26 Keyless
Wattage: 2 - 60 A
Note: Custom Height Available

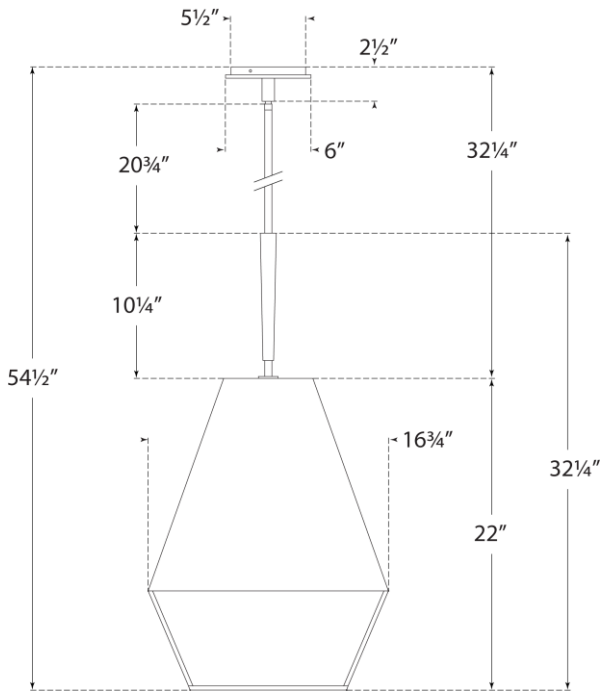

VISUAL COMFORT