TEAR SHEET

Ring Form Large Table Lamp
Item # CHA 8970ALB-NP

Designer: Chapman & Myers

Height: 27"
Width: 18"
Base: 4.5" x 7.5" Rectangle
Finishes: AB, ALB, BZ, CG
Shade Treatments: L, NP
Shade Details: 14" x 18" x 11" Rectangle
Socket: E26 Dimmer
Wattage: 100 A19
Weight: 18 Pounds
Note: French Wired
©EFC DESIGNS

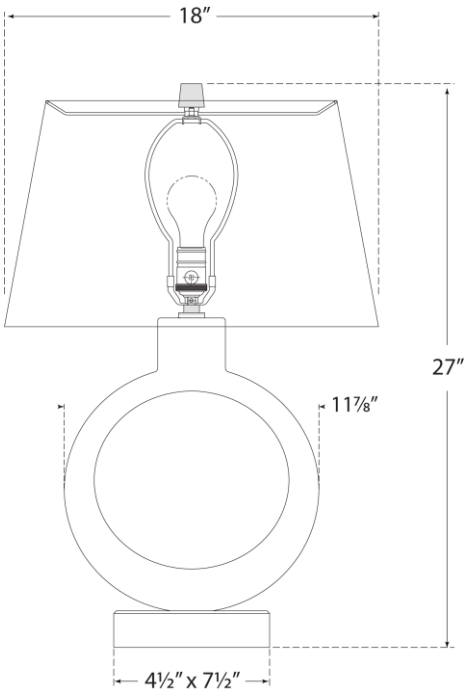

VISUAL COMFORT & CO.