SPEC SHEET

Edwardian Open Bottom Flush Mount
Item # CHC 4132AB-WG

Designer: Chapman & Myers

Height: 11.5"
Width: 10"
Canopy: 8" Round
Finishes: AB, AN, BZ, PN
Glass Options: CG, WG
Socket: E26 Keyless
Wattage: 60 B
©EFC DESIGNS

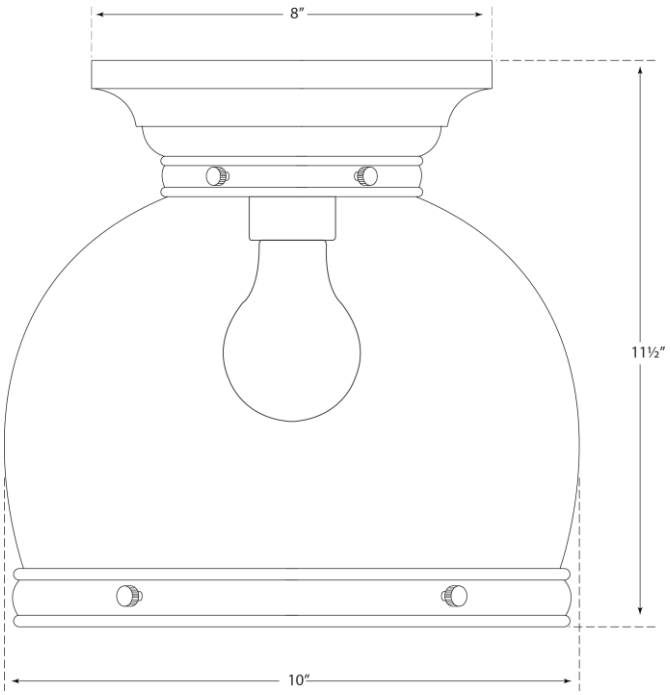

VISUAL COMFORT