TEAR SHEET

Coventry Large Lantern

Item # CHC 5110BLK/AB-CG

Designer: Chapman & Myers

Height: 46.25"
Width: 24"
Canopy: 7" Round
Finishes: BLK/AB, WHT/AB
Glass Options: CG
Socket: 4 - E12 Candelabra
Wattage: 4 - 40 C11
Weight: 57 Pounds

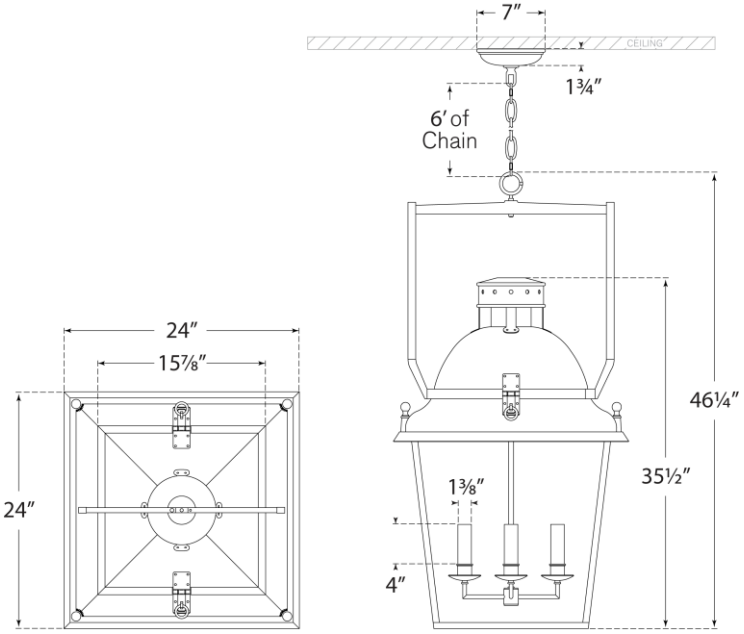

Top View

Front View

VISUAL COMFORT