SPEC SHEET

Launceton Large Square Lantern
Item # CHC 5612BZ-CG

Designer: Chapman & Myers

Height: 46"
Width: 24"
Canopy: 6.25" Round
Finishes: AB, AN, BZ, PN
Glass Options: CG
Socket: 6 - E12 Candelabra
Wattage: 6 - 60 C
Note: Requires Special Assembly and Installation
©EFC DESIGNS

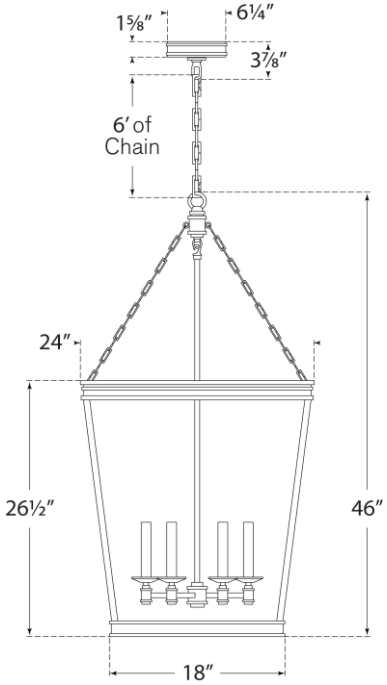

VISUAL COMFORT