SPEC SHEET

Chinoiserie Single Light
Item # CHD 1515AN-WG

Designer: Chapman & Myers

Height: 11"
Width: 5.25"
Extension: 7.5"
Backplate: 4.75" Square
Finishes: AN, BZ
Glass Options: WG
Socket: E26 Keyless
Wattage: 60 A
©EFC DESIGNS

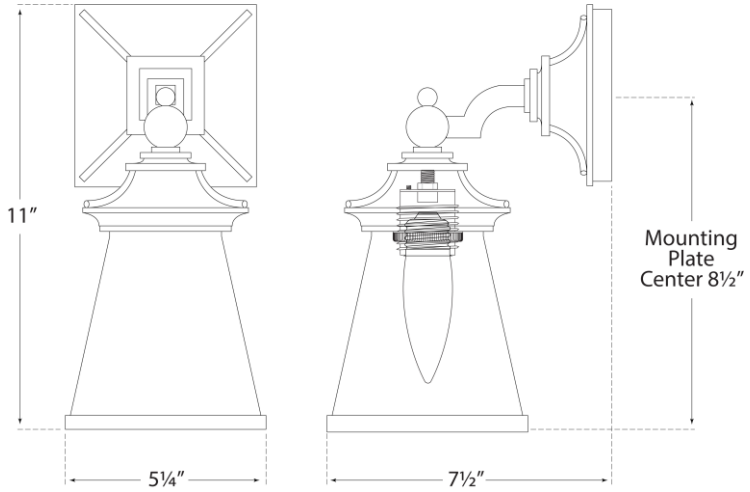

VISUAL COMFORT