TEAR SHEET

Pimlico Swing Arm
Item # CHD 2154PN-NP

Designer: Chapman & Myers

Height: 17"
Width: 25.5"
Extension: 25"
Backplate: 3" x 6.5" Rectangle
Finishes: AB, AN, PN
Shade Treatments: L, LCC, NP
Shade Details: 7" x 12" x 9"
Socket: E26 Hi-Lo
Wattage: 60 A19
Weight: 7 Pounds
Note: Cord Cover Included

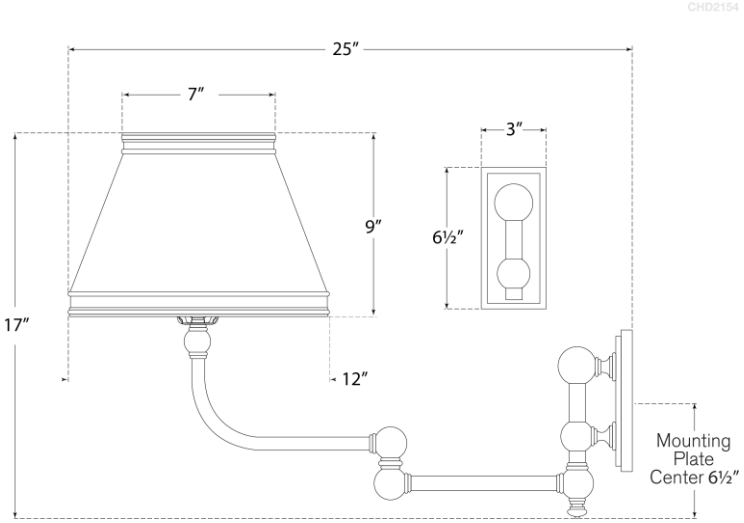

VISUAL COMFORT & CO.