SPEC SHEET

Paladin Short Modern Obelisk Sconce
Item # CHD 2264CG/PN

Designer: Chapman & Myers

Height: 17"
Width: 5"
Extension: 5.75"
Backplate: 5" x 7.25" Rectangle
Finishes: CG/PN
Socket: E12 Candelabra
Wattage: 60 C
©EFC DESIGNS

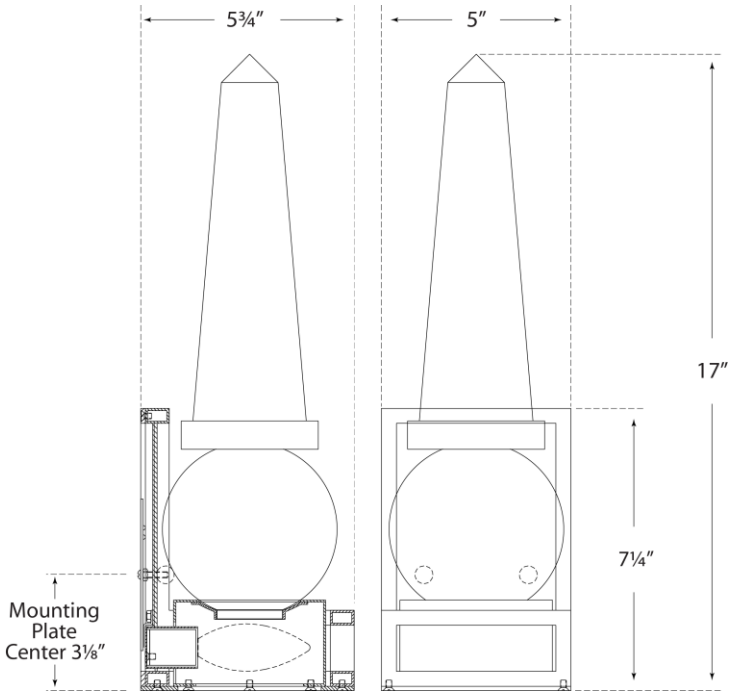

VISUAL COMFORT