TEAR SHEET

Modern Darlana Bouillotte Sconce

Item # CHD 2266PN-NP

Designer: Chapman & Myers

Height: 22.5"
Width: 12.5"
Extension: 6.5"
Backplate: 4" Square
Finishes: BZ, PN
Shade Treatments: NP
Shade Details: 12" x 12.5" x 7" Shield
Socket: 2 - E12 Candelabra
Wattage: 2 - 40 C11
Weight: 5 Pounds
©EFC DESIGNS

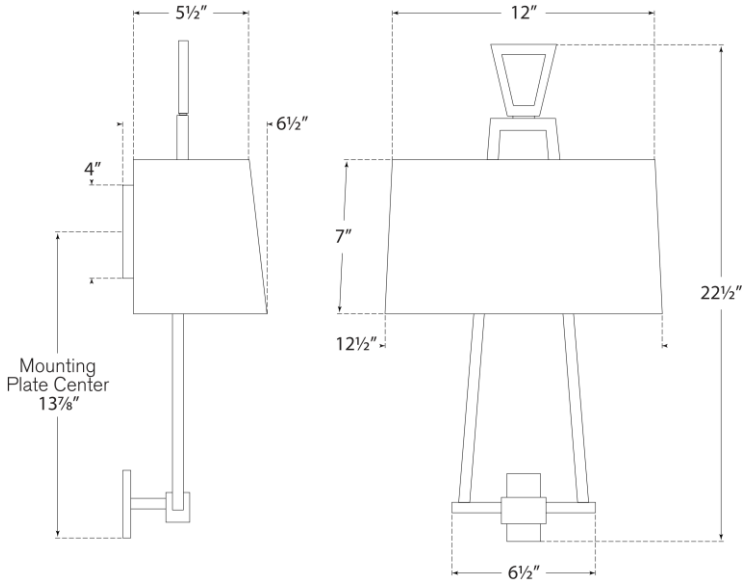

VISUAL COMFORT