SPEC SHEET

Varney Medium Table Lamp

Item # CS 3642MBB-L

Designer: Christopher Spitzmiller

Height: 30"
Width: 16"
Base: 8" Round
Finishes: BKP, IVO, LLC, MBB
Shade Treatments: L
Shade Details: 14" x 16" x 13"
Socket: E26 Dimmer
Wattage: 100 A
Note: Reactive Ceramic Glazes Will Vary in Color and Texture

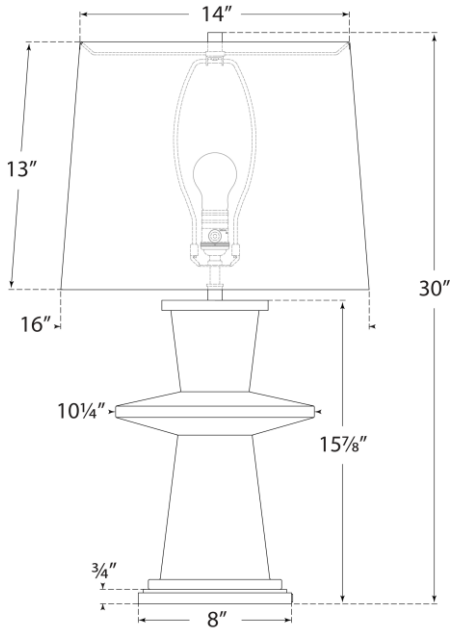

Front View

VISUAL COMFORT