TEAR SHEET

Eyre Large Flush Mount
Item # KS 4082PN/WG-L/LLC

Designer: kate spade new york

Height: 10.5"
Width: 18"
Canopy: 9.25" Round
Finishes: PN/WG
Shade Treatments: L/LLC
Socket: E26 Keyless
Wattage: 15 LED A19
Weight: 10 Pounds

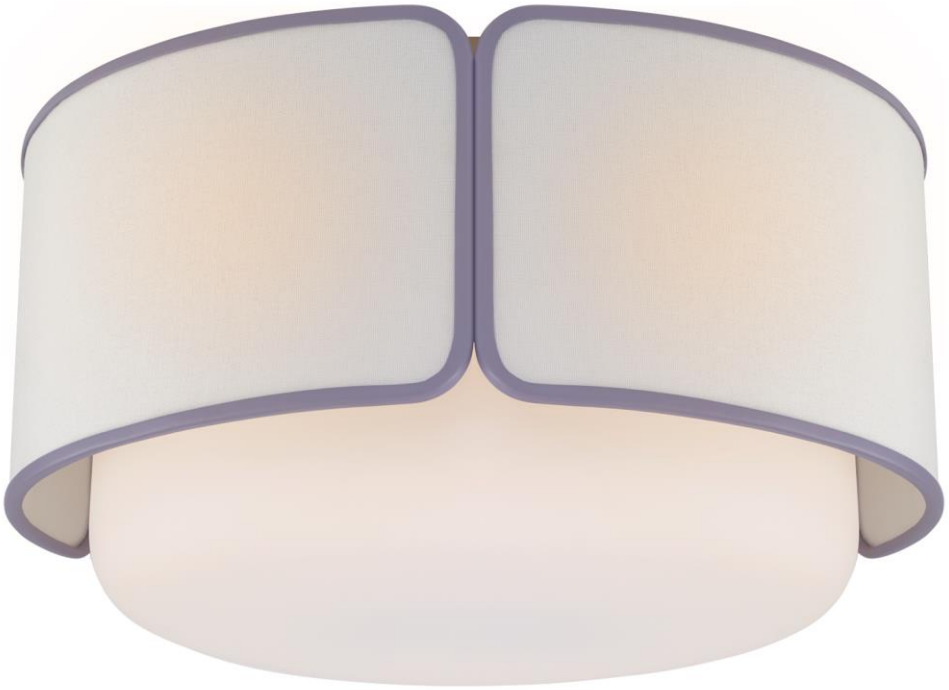

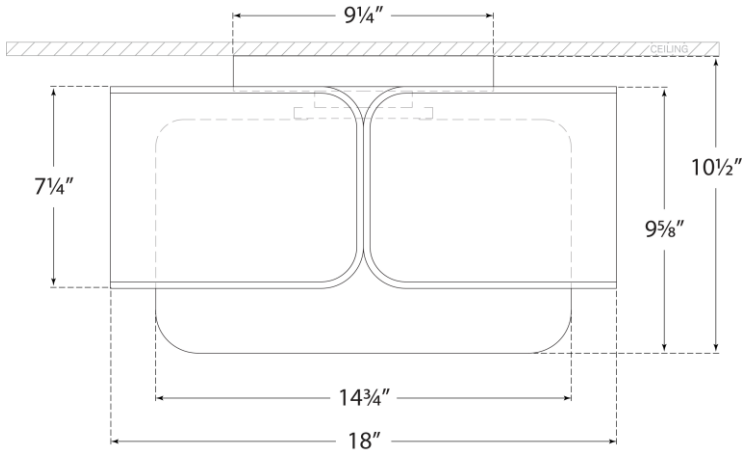

VISUAL COMFORT & CO.

DAMP LED 4