SPEC SHEET

Grayson 5.25" Solitaire Flush Mount
Item # KS 4945G-CG

Designer: kate spade new york

Height: 2.5"
Width: 5.25"
Canopy: 4.25" Round
Finishes: BSL, G
Glass Options: CG
Socket: Dedicated LED
Wattage: 11w (1100lm)

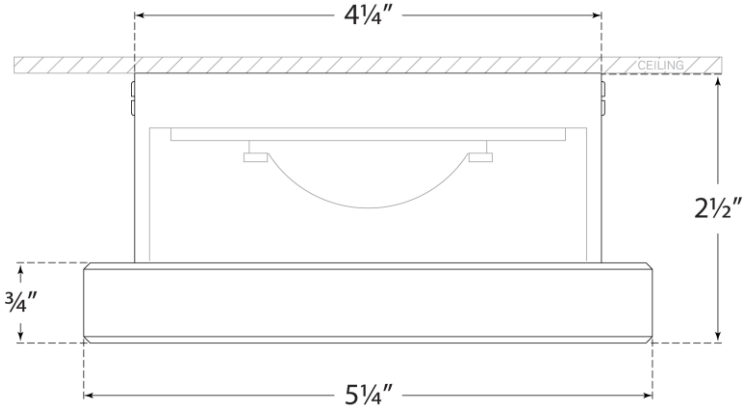

VISUAL COMFORT