TEAR SHEET

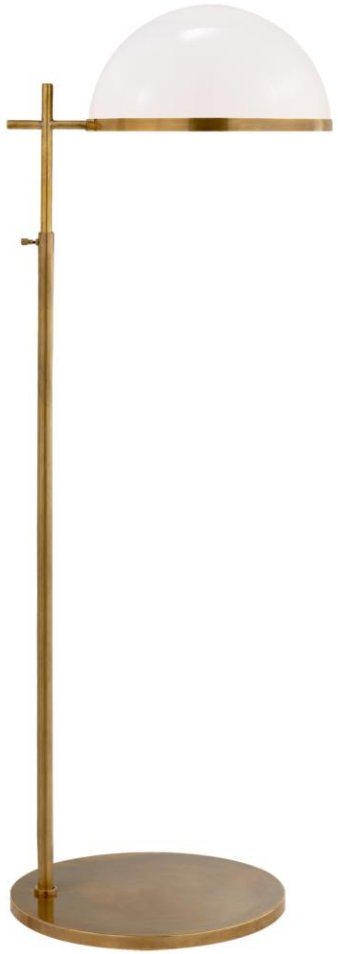

Dulcet Medium Pharmacy Floor Lamp
Item # KW 1240AB-WG

Designer: Kelly Wearstler

Height: 43.5" - 54.5"
Width: 15"
Extension: 17.25"
Base: 15" Round
Finishes: AB, BZ, PN
Shade Treatments: AB, BZ, PN, WG
Shade Details: White Glass
Socket: E26 Keyless w/ Foot Switch
Wattage: 60 A19
Weight: 32 Pounds

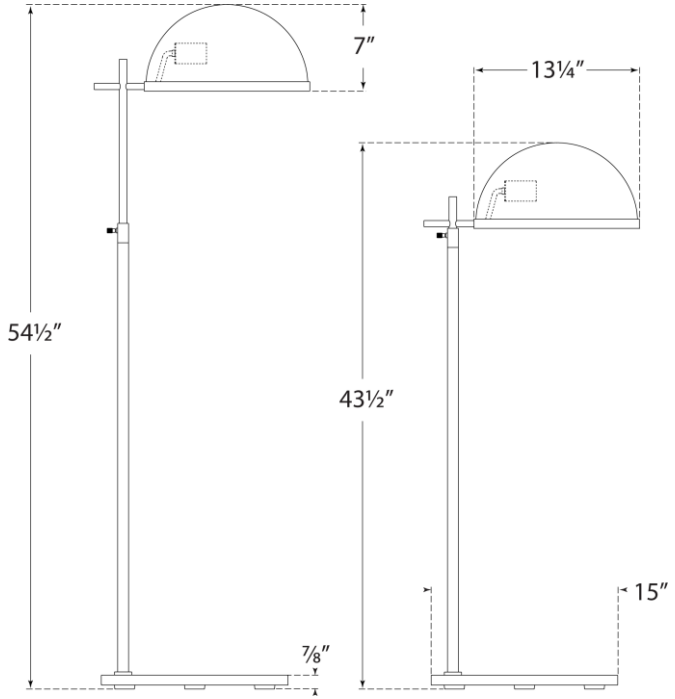

VISUAL COMFORT