SPEC SHEET

Bayliss Table Lamp
Item # KW 3046WLC-L

Designer: Kelly Wearstler

Height: 31.75"
Width: 17"
Base: 8" Square
Finishes: BLK, WLC
Shade Treatments: L
Shade Details: 11" x 17" x 12.5"
Socket: E26 Dimmer
Wattage: 150 A

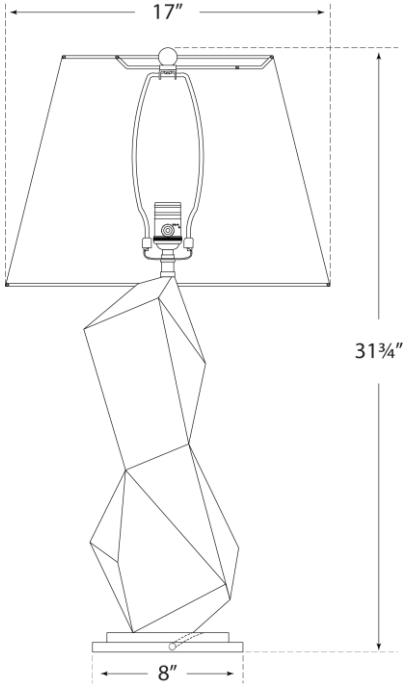

VISUAL COMFORT