TEAR SHEET

Affinity Medium Dome Table Lamp

Item # KW 3920BM-PN

Designer: Kelly Wearstler

Height: 22"
Width: 15"
Base: 5" Round
Finishes: BM, WM
Shade Treatments: AB, PN
Socket: 3 - E12 w/ Line Switch
Wattage: 3 - 40 B11
Weight: 19 Pounds

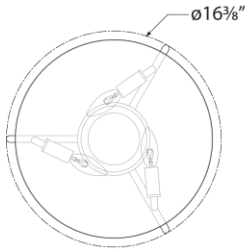

Top View

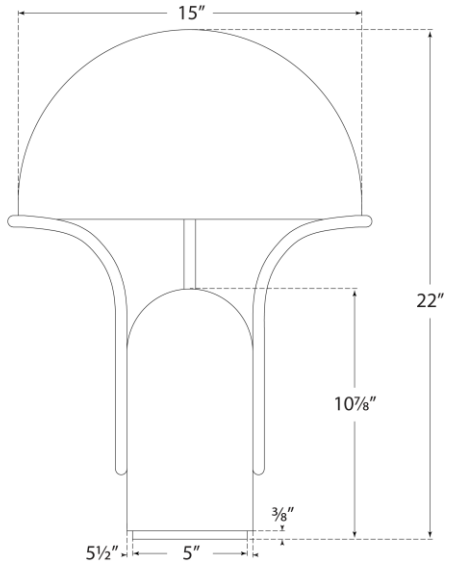

Front View

VISUAL COMFORT