TEAR SHEET

Strada Ring Chandelier

Item # KW 5181BSL

Designer: Kelly Wearstler

Height: 25.75"
Width: 40"
Canopy: 5.5" Round
Finishes: AI, BSL, G, PN
Socket: 16 - E12 Candelabra
Wattage: 16 - 40 C11
Weight: 66 Pounds

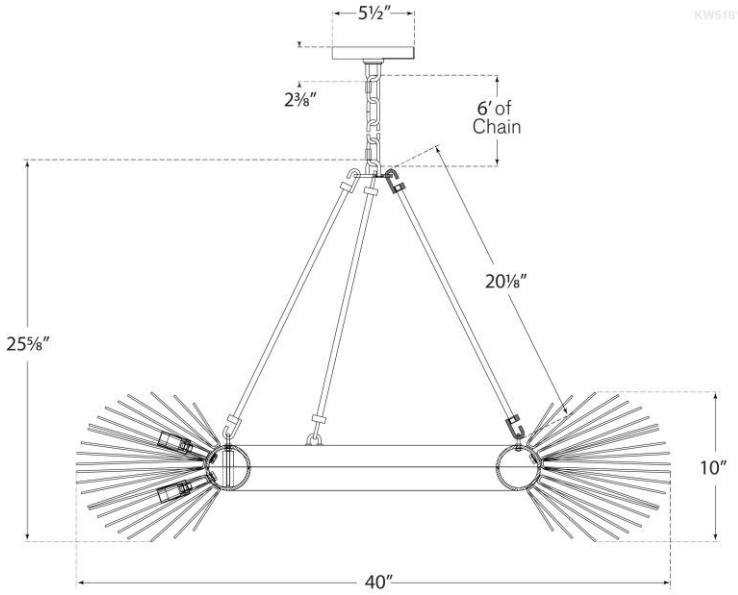

VISUAL COMFORT