TEAR SHEET

Ori Medium Linear Chandelier

Item # KW 5650AB-CLG

Designer: Kelly Wearstler

O/A Height: 67"
Fixture Height: 32.25"
Min. Custom Height: 40"
Width: 55"
Canopy: 8.25" Round
Finishes: AB, PN
Glass Options: CLG
Socket: Dedicated LED
Wattage: 12w (1000lm)
Weight: 25 Pounds
Note: Custom Height Available

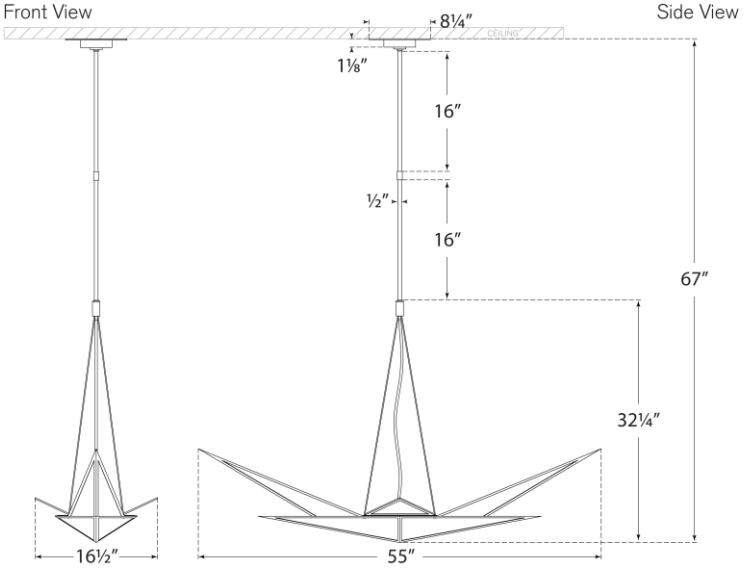

VISUAL COMFORT