TEAR SHEET

Fascio Medium Linear Chandelier

Item # LR 5910PN-CG

Designer: Lauren Rottet

O/A Height: 38"
Fixture Height: 4.5"
Min. Custom Height: 7.25"
Width: 38"
Canopy: 4.5" x 10" Decorative
Finishes: HAB, PN
Trim Options: CG
Socket: Dedicated LED
Wattage: 50w (4000lm)
Weight: 29 Pounds
Note: Custom Height Available

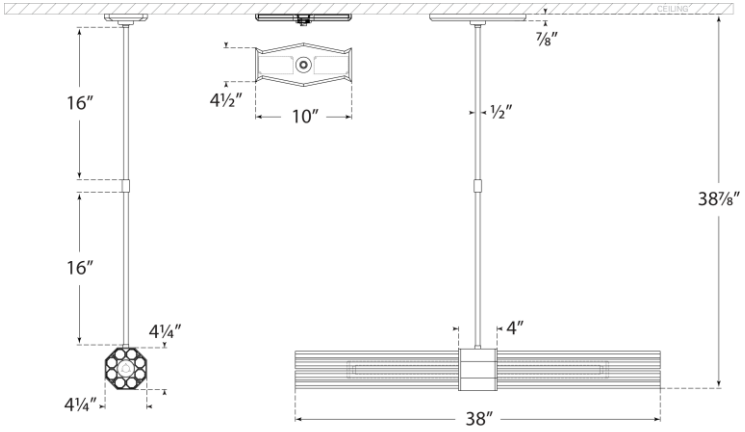

Side View

Front View

VISUAL COMFORT

DAMP LED 4