SPEC SHEET

Willoughby Large Picture Light
Item # RL 2698PN

Designer: Ralph Lauren

Height: 8.75"
Width: 24"
Extension: 10.5"
Backplate: 2.75" x 5" Decorative
Finishes: PN
Socket: 4 - E17 Keyless
Wattage: 4 - 40 T
Note: Requires Smaller Outlet Box

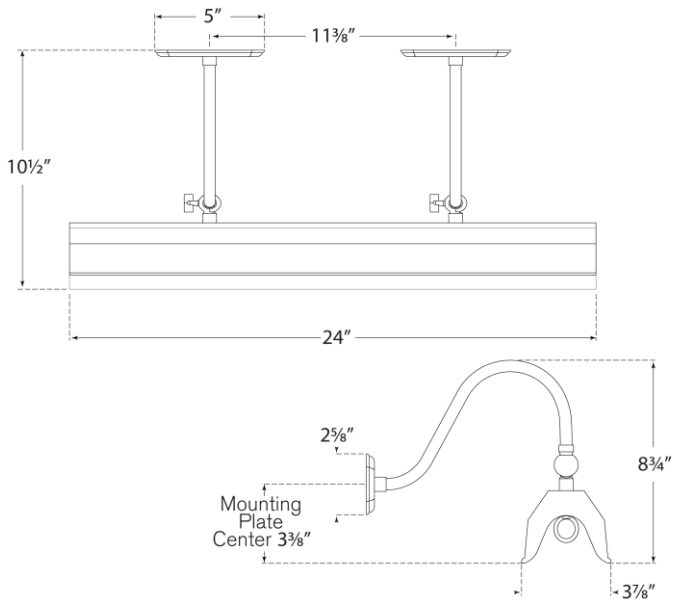

VISUAL COMFORT & CO. Est. 1987