SPEC SHEET

Montgomery 26" Picture Light
Item # RL 2711PN

Designer: Ralph Lauren

Height: 4.25"
Width: 26.5"
Extension: 8.5"
Backplate: 4.25" x 12" Rectangle
Finishes: PN
Socket: 3 - E26 Keyless
Wattage: 3 - 40 T

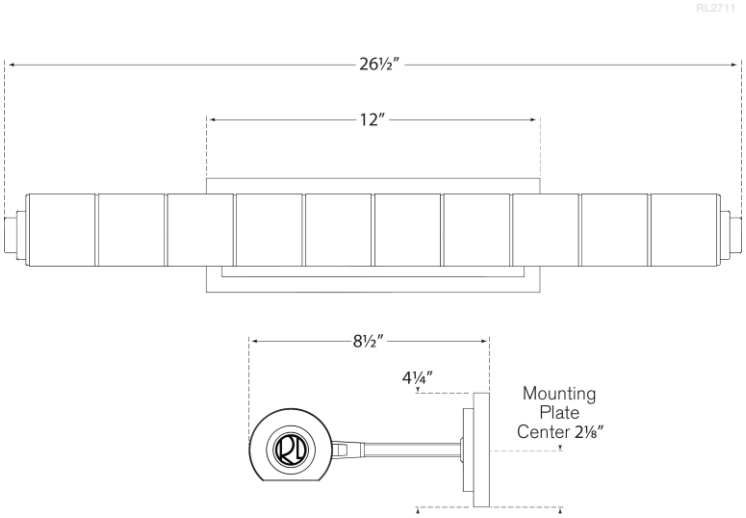

VISUAL COMFORT