TEAR SHEET

Fulton Large Pendant

Item # RL 5122IS-BK

Designer: Ralph Lauren

O/A Height: 62.25"
Fixture Height: 23.5"
Min. Custom Height: 34.5"
Width: 22"
Canopy: 6.25" Round
Finishes: IS, PN
Shade Treatments: BK, IS, PN, WT
Socket: E26 Keyless
Wattage: 75 A19
Weight: 25 Pounds
Note: Custom Height Available

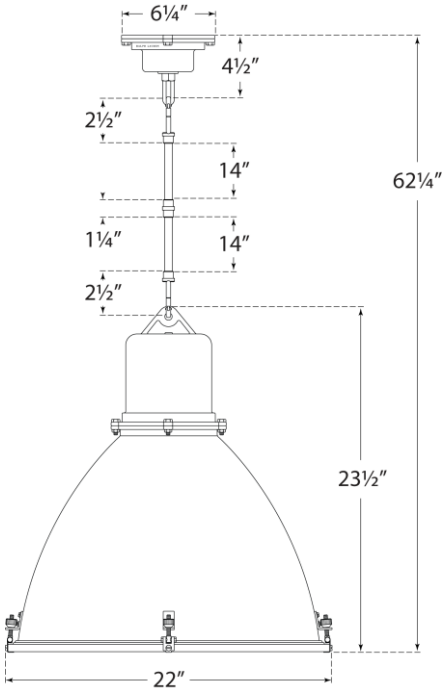

VISUAL COMFORT