**TEAR SHEET**

**Riley Large Two Tier Chandelier**

Item # RL 5614NB/NVY-L

Designer: Ralph Lauren

Height: 54"
Width: 48"
Canopy: 6.5" Round
Finishes: NB/CHC, NB/NVY, NB/SDL
Shade Treatments: L
Socket: 12 - E12 Candelabra
Wattage: 12 - 40 B11
Weight: 54 Pounds

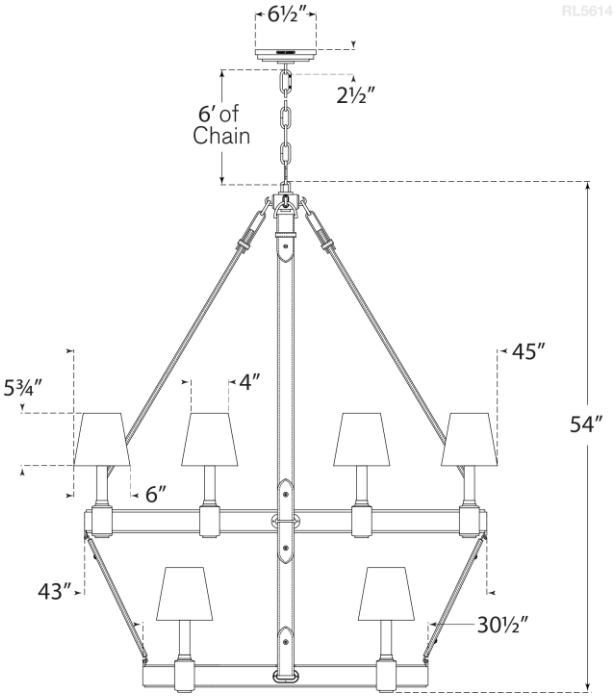


VISUAL COMFORT