TEAR SHEET

Beatrice Large Lantern

Item # RL 5742GI-RG

Designer: Ralph Lauren

Height: 41.5"
Width: 24"
Canopy: 8" Round
Finishes: AI, GI
Glass Options: RG
Socket: 4 - E12 Candelabra
Wattage: 4 - 40 B11
Weight: 47 Pounds

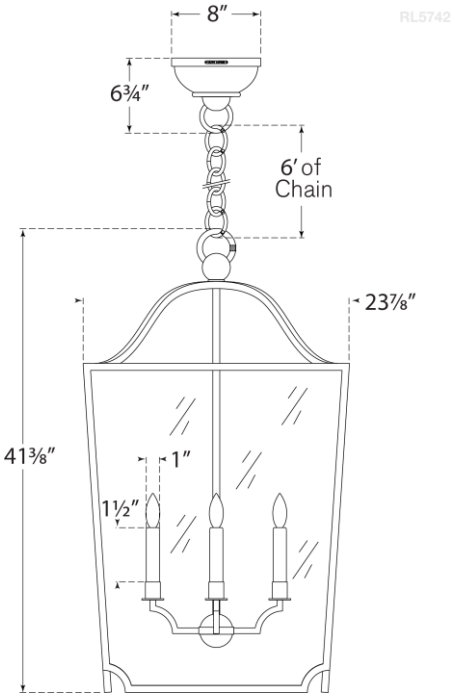

VISUAL COMFORT