TEAR SHEET

Cooper Sconce
Item # S 2090HAB-NP

Designer: Studio VC

Height: 21"
Width: 9"
Extension: 4"
Backplate: 4.25" Square
Finishes: HAB, PN
Shade Treatments: NP
Shade Details: 9" x 9" x 9.5" Rectangle
Socket: E12 Candelabra
Wattage: 60 B

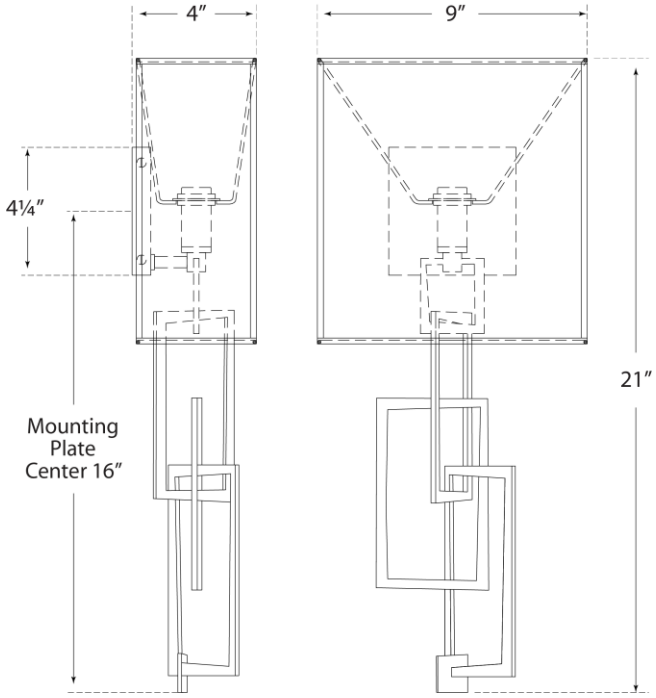

VISUAL COMFORT