TEAR SHEET

French Single Sconce
Item # S 2110AN-T

Designer: Studio VC

Height: 12"
Width: 6"
Extension: 10"
Backplate: 4.5" Round
Finishes: AN, BZ, HAB, PN
Shade Treatments: L, NP, T
Shade Details: 3" x 6" x 5"
Socket: E12 Candelabra
Wattage: 40 B11
Weight: 3 Pounds

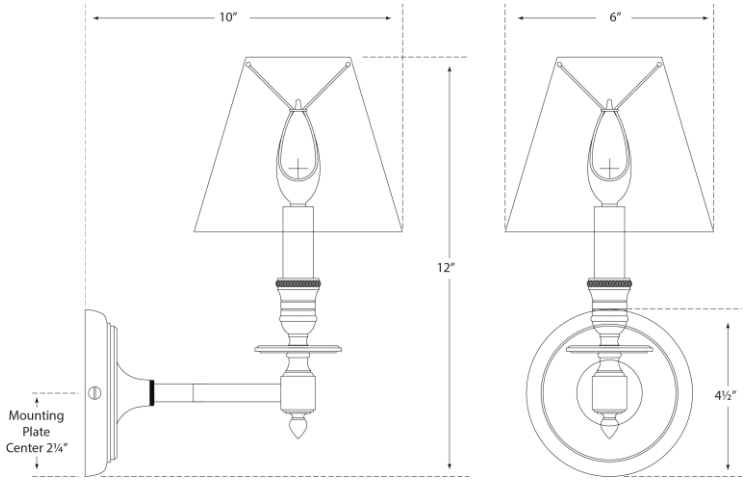

VISUAL COMFORT & CO.