TEAR SHEET

Etoile Large Tail Sconce

Item # S 2321GI-NP

Designer: Ian K. Fowler

Height: 30"
Width: 9.5"
Extension: 8"
Backplate: 5.5" x 9.5" Diamond
Finishes: AI, GI, PN
Shade Treatments: L, NP
Shade Details: 8" x 9.5" x 8.75" Shield
Socket: 2 - E12 Candelabra
Wattage: 2 - 40 B11
Weight: 7 Pounds

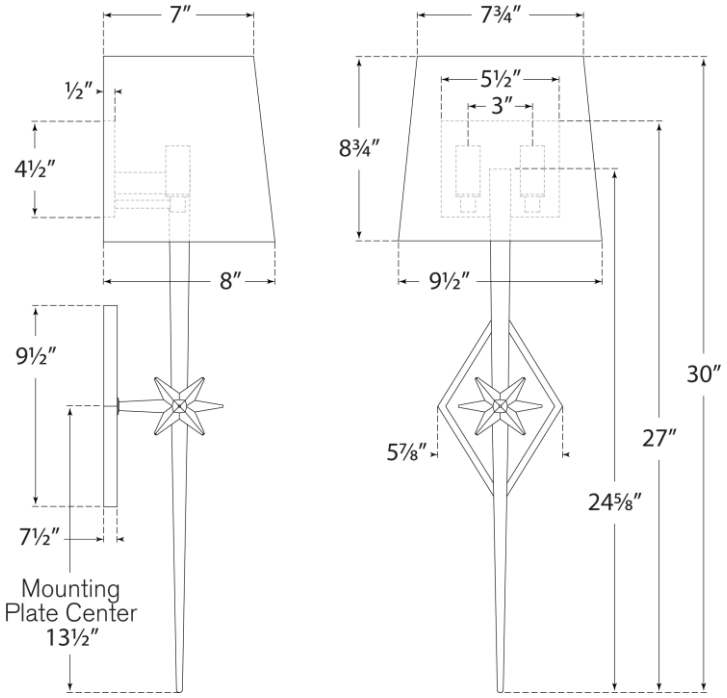

VISUAL COMFORT & CO.