TEAR SHEET

Scala Hand-Forged Table Lamp
Item # S 3513GI-PL

Designer: Ian K. Fowler

Height: 26.25"
Width: 16"
Base: 6.5" Cross
Finishes: AI, GI
Shade Treatments: L, PL
Shade Details: 16" x 16" x 8.75"
Socket: E26 Dimmer
Wattage: 75 A19
Weight: 15 Pounds

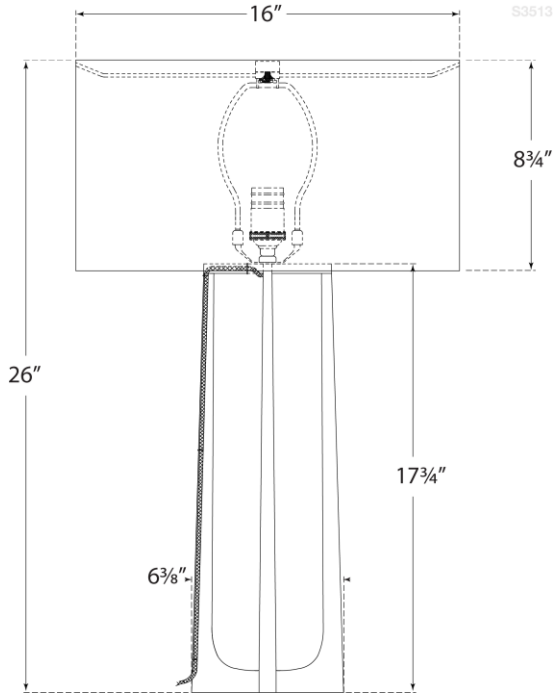

VISUAL COMFORT & CO.