TEAR SHEET

Wright Table Lamp
Item # S 3701GI-NP

Designer: Studio VC

Height: 33"
Width: 17"
Base: 4.5" x 7.5" Rectangle
Finishes: GI, PN
Shade Treatments: L, NP
Shade Details: 12.5" x 17" x 10" Rectangle
Socket: E26 Hi-Lo
Wattage: 150 A21
Weight: 12 Pounds

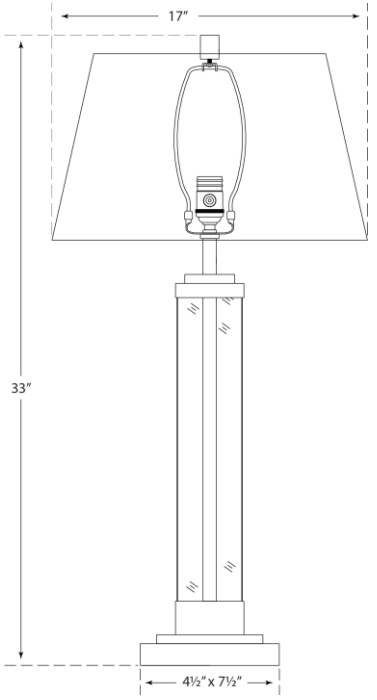

VISUAL COMFORT