TEAR SHEET

Madeleine Floor Lamp
Item # SK 1505AI-NP

Designer: Suzanne Kasler

Height: 66"
Width: 21"
Base: 22" Tripod
Finishes: AI, BW, GI
Shade Treatments: L, NP
Shade Details: 14" x 21" x 14"
Socket: E26 Hi-Lo
Wattage: 150 A21
Weight: 21 Pounds

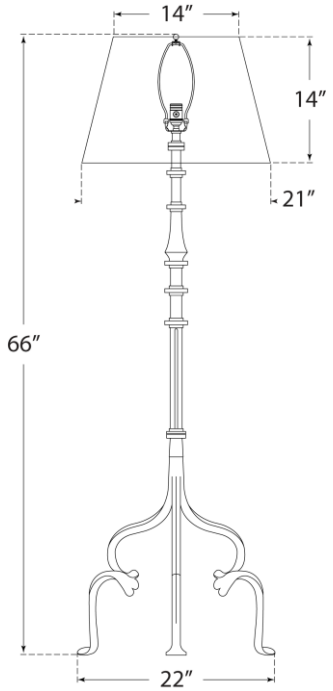

VISUAL COMFORT & CO.