SPEC SHEET

Coral Floor Lamp
Item # SK 1610PN-L

Designer: Suzanne Kasler

Height: 63.5"
Width: 15"
Base: 7" x 10.5" Rectangle
Finishes: PN
Shade Treatments: L
Shade Details: 12" x 15" x 12"
Socket: E26 Dimmer
Wattage: 100 A

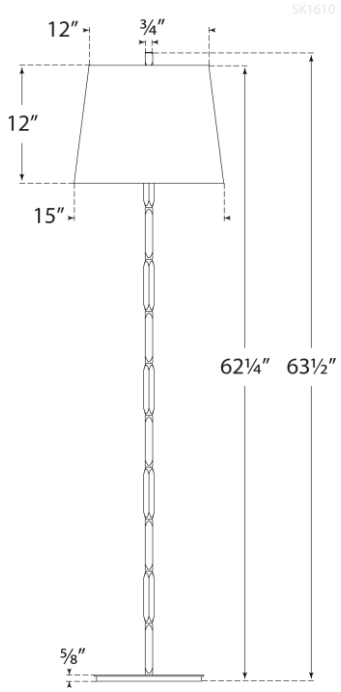

VISUAL COMFORT & CO. Est. 1987