TEAR SHEET

Camille Small Chandelier
Item # SK 5050PN-NP

Designer: Suzanne Kasler

Height: 25.5"
Width: 27.25"
Canopy: 4.25" Round
Finishes: BZ, HAB, PN
Shade Treatments: L, NP
Shade Details: 4" x 5.5" x 6"
Socket: 4 - E12 Candelabra
Wattage: 4 - 40 B11
Weight: 9 Pounds

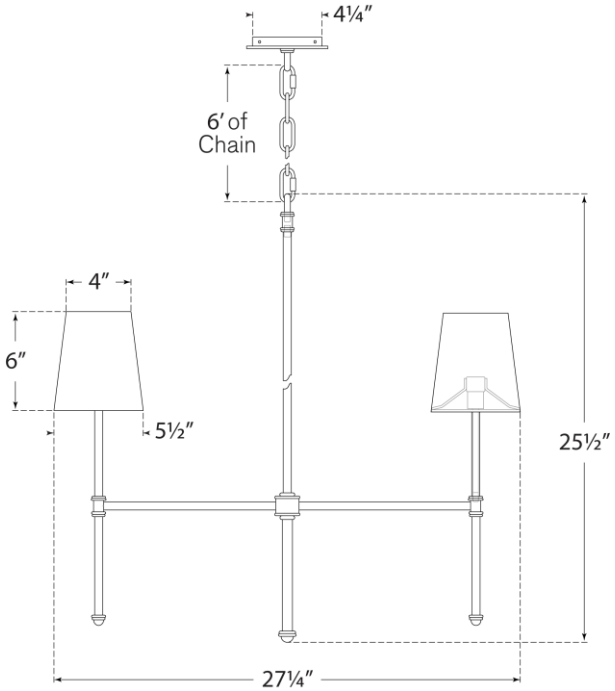

VISUAL COMFORT