TEAR SHEET

Limoges Tall Pendant

Item # SK 5371NR-CG

Designer: Suzanne Kasler

Height: 25.5"
Width: 13.5"
Canopy: 5.5" Round
Finishes: NR
Glass Options: CG
Socket: E26 Keyless
Wattage: 15 LED A19
Weight: 8 Pounds

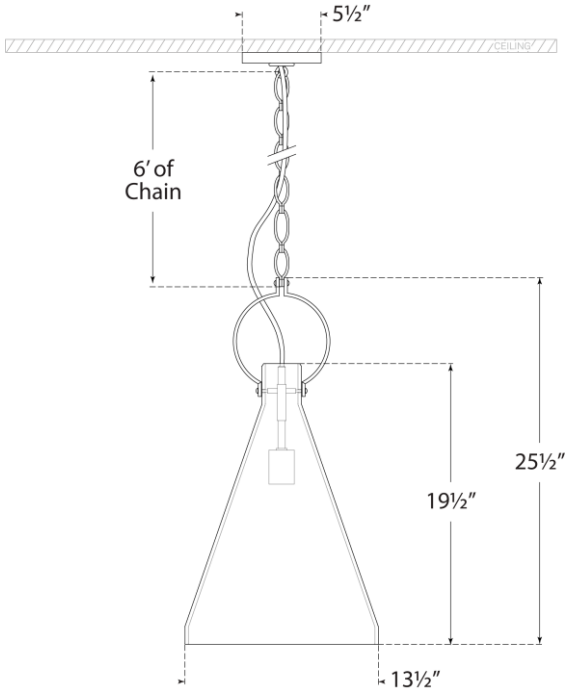

VISUAL COMFORT