SPEC SHEET

Yoke Mini Pendant
Item # SL 5174BZ-BZ

Designer: Chapman & Myers
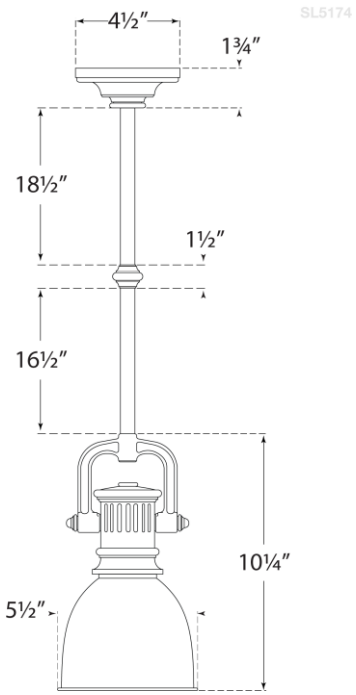
O/A Height: 47"
Min. Custom Height: 18"
Width: 5.5"
Canopy: 4.5" Round
Finishes: BZ
Shade Treatments: BZ, WG
Socket: E26 Keyless
Wattage: 60 A
Note: Custom Height Available
©EFC DESIGNS