SPEC SHEET

McClean Easel Light

Item # SP 3041HAB

Designer: J. Randall Powers

Height: 19.75"
Width: 12"
Base: 7" x 11.75" Rectangle
Finishes: BZ, HAB, PN
Socket: 2 - E12 Candelabra w/ Line Switch
Wattage: 2 - 40 B

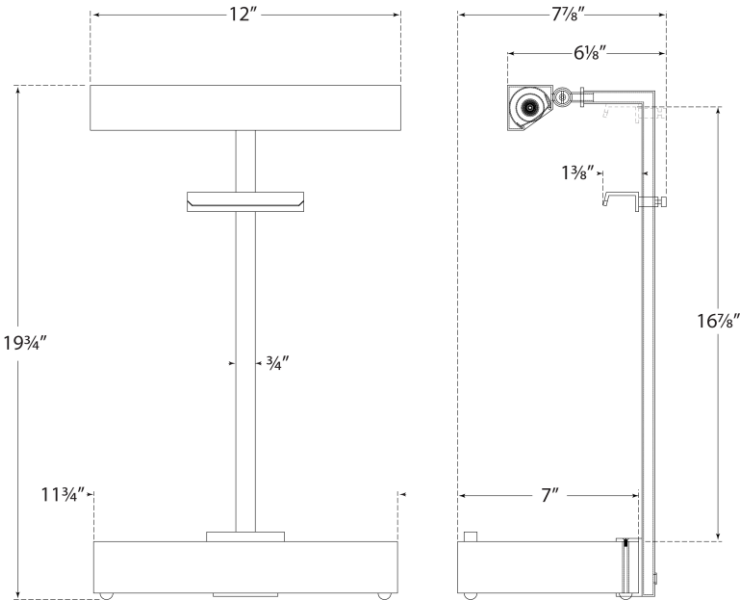

VISUAL COMFORT