SPEC SHEET

Tavares Large Floor Lamp
Item # TOB 1390AI/HAB-L

Designer: Thomas O'Brien

Height: 70.5"
Width: 21.75"
Base: 21.75" Tripod
Finishes: AI
Shade Treatments: L
Shade Details: 15" x 16" x 17"
Socket: E26 Dimmer
Wattage: 100 A

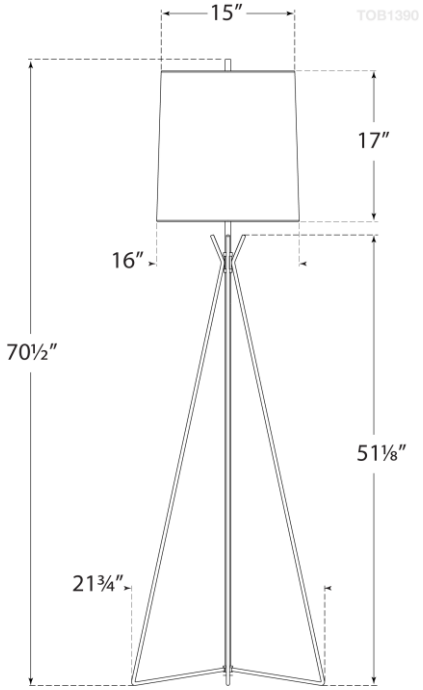

VISUAL COMFORT