SPEC SHEET

Calliope Small Pendant
Item # TOB 5184HAB-WG

Designer: Thomas O'Brien

O/A Height: 50.5"
Fixture Height: 14.75"
Min. Custom Height: 21.5"
Width: 5.25"
Canopy: 4.5" Round
Finishes: BZ, HAB, PN
Glass Options: WG
Socket: E26 Keyless
Wattage: 60 T
Note: Custom Height Available

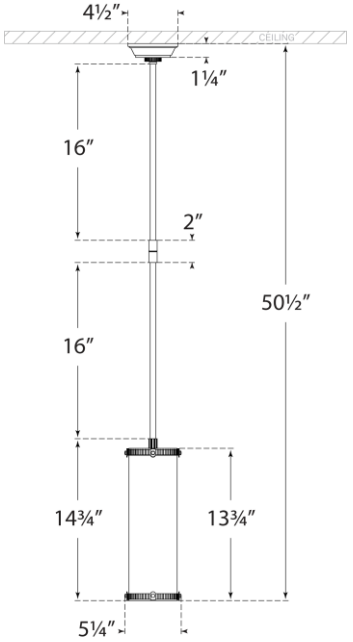

Front View

VISUAL COMFORT