TEAR SHEET

Katie Globe Pendant

Item # TOB 5226HAB/G4-WG

Designer: Thomas O'Brien

Height: 14"
Width: 12"
Canopy: 5.25" Round
Finishes: BZ, HAB, PN
Glass Options: CG, SG, WG
Socket: E26 Keyless
Wattage: 75 A19
Weight: 8 Pounds
Note: Item Includes 3 ft. of Chain

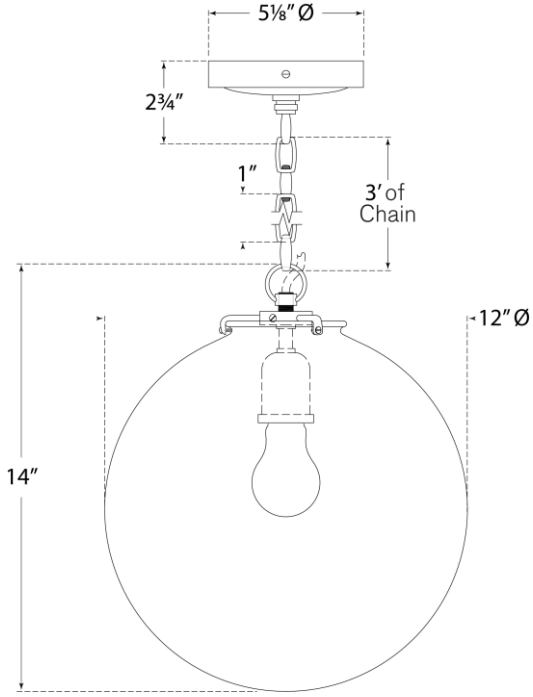

VISUAL COMFORT

DAMP 4