TEAR SHEET

Katie Cylinder Pendant
Item # TOB 5226PN/G3-SG

Designer: Thomas O'Brien
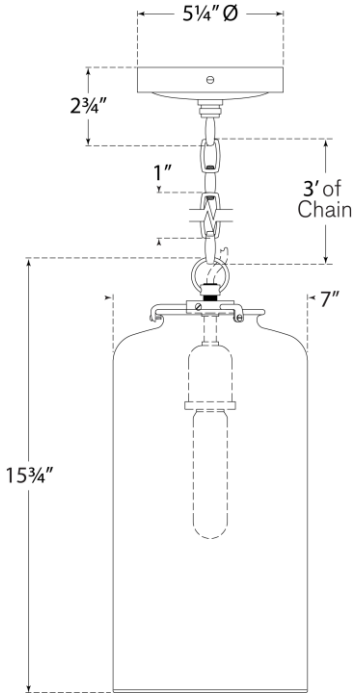
Height: 15.75"
Width: 7"
Canopy: 5.25" Round
Finishes: BZ, HAB, PN
Glass Options: CG, SG, WG
Socket: E26 Keyless
Wattage: 75 A19
Weight: 8 Pounds
Note: Item Includes 3 ft. of Chain